TABLE OF CONTENTS

- On Capture The Flags
- The Challenge
- Useful Knowledge
- The Solution
- The Code

ON CAPTURE THE FLAGS

Capture The Flags are computer science offline/online events that focus on **LEARNING BY DOING.**

In the specific context of **computer security**, CTFs are composed of a series of **challenges**, where the goal of each challenge is to capture a specific **flag**.

$$\mathrm{Flag\{Crypt0IsH4rd\}}$$

The flag however is not easy to get, as it is protected by various mechanism.

In order to solve the challenge and get the flag, the user needs to **find**, **research** and **exploit** one or more **vulnerabilities**.

Each challenge typically is inserted within a specific **category**.

Web

Binary (pwn)

Crypto

Reverse

OSINT

Mobile

Learning through CTFs can be **fun** and **instructive**.

Let then check out our very first challenge.

THE CHALLENGE

Yet Another Oracle

Challenge Overview (1/8)

Challenge made up of a single python script, `server.py`, which implements a **basic TCP server** written in python.

Challenge Overview (2/8)

The challenge is started server-side

```
$ python3 server.py
[INFO] - Start of challenge: Yet Another Oracle
[INFO] - Listening on 4444...
```

Challenge Overview (3/8)

As soon as we connect we see the following

```
$ nc localhost 4444
Hi, I've been told to show you this.
=====================================

ENCRYPTED_FLAG WITH CBC-AES:
 /s0/br/6DThDlXDzViyNwrcX0XbJihAV2a5ikLfp6r5mpNCGKe9lYtlVzuIfTLtz

>
```

Challenge Overview (4/8)

We can interact with the challenge by sending an arbitrary amount of bytes, and the server replies with either `NOPE` or `OK!`.

```
$ nc localhost 4444
Hi, I've been told to show you this.
=====================================

ENCRYPTED_FLAG WITH CBC-AES:
 /s0/br/6DThDlXDzViyNwrcX0XbJihAV2a5ikLfp6r5mpNCGKe9lYtlVzuIfTLtz

> test
NOPE
> /s0/br/6DThDlXDzViyNwrcX0XbJihAV2a5ikLfp6r5mpNCGKe9lYtlVzuIfTLtz
OK!
```

Challenge Overview (5/8)

In terms of code, we have the following

```python
def challenge_3_main():
    global IV, KEY, CIPHER, ENCRYPTED_FLAG

    IV = get_random_bytes(AES.block_size)
    KEY = get_random_bytes(AES.block_size)
    CIPHER = AES.new(KEY, AES.MODE_CBC, IV)

    # Cannot decrypt first block, so put garbage
    data_to_encrypt = b"A" * 16 + FLAG
    ENCRYPTED_FLAG = b64encode(CIPHER.encrypt(pad(data_to_encrypt, AES.block_size)))

    print("[INFO] - Start of challenge n. 3: Yet Another Oracle")
    print("[INFO] - Listening on 4444...")

    socketserver.TCPServer.allow_reuse_address = True
    server = ReusableTCPServer(("0.0.0.0", 4444), incoming)
    server.serve_forever()
```

Challenge Overview (6/8)

When a client connects to the server the `challenge` function is executed

```
def challenge(req):
    global IV, KEY, CIPHER, ENCRYPTED_FLAG
    req.sendall(b'Hi, I\'ve been told to show you this.\n' +\
                b'====================================\n\n' +\
                b'ENCRYPTED_FLAG WITH CBC-AES: ' +\
                ENCRYPTED_FLAG + b'\n\n> ')
    time.sleep(0.2)
    while True:
        try:
            client_payload = req.recv(4096)
            if len(client_payload) > 0:
                oracle_output = oracle(client_payload)
                if oracle_output == True:
                    req.sendall(b'OK!\n> ')
                else:
                    req.sendall(b'NOPE\n> ')
        except Exception as e:
            print(e)
            exit()
```

Challenge Overview (7/8)

The `oracle` function checks for **PKCS#7 conformity**

```
def oracle(payload):
    try:
        payload = b64decode(payload)
        CIPHER = AES.new(KEY, AES.MODE_CBC, IV)
        decrypted_payload = CIPHER.decrypt(payload)
        unpadded_payload = unpad(decrypted_payload, AES.block_size)
        return True
    except ValueError as e:
        return False
```

Challenge Overview (8/8)

The **goal** of the challenge is to

decrypt the message without using directly the server's private key

USEFUL KNOWLEDGE

The code of the challenge is vulnerable to a

PKCS#7 padding oracle attack

Q: What is a **padding oracle attack**?

Q: What is a **padding oracle attack**?

A: This vulnerability has to do with

- **Block ciphers in CBC mode**
- **PKCS #7 padding**
- **MAC-then-ENCRYPT**
- **Cryptographic Oracles**

Let's understand in detail each part.

AES-CBC

AES-CBC (1/7)

An example of block cipher is **AES**, which has a block size of 128 bits.

$$\underbrace{\texttt{01}\ldots\texttt{101}}_{\text{plaintext (128 bits)}} \longrightarrow \text{AES} \longrightarrow \underbrace{\texttt{11}\ldots\texttt{001}}_{\text{ciphertext (128 bits)}}$$

AES-CBC (2/7)

In CBC mode, each block of plaintext is XORed with the previous ciphertext block before being encrypted.

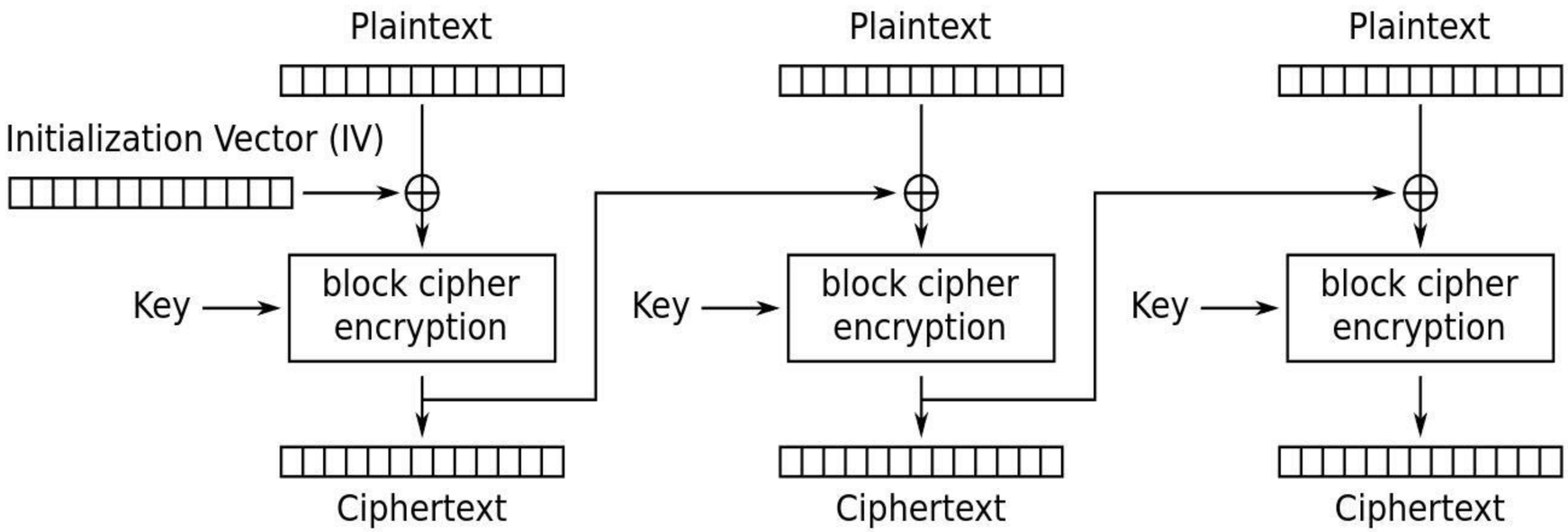

Cipher Block Chaining (CBC) mode encryption

AES-CBC (3/7)

AES-CBC encryption formula

$$
\begin{aligned}
C_1 &= \text{AES-ENC}(k, IV \oplus P_1) \\
C_2 &= \text{AES-ENC}(k, C_1 \oplus P_2) \\
&\vdots \\
C_n &= \text{AES-ENC}(k, C_{n-1} \oplus P_n)
\end{aligned}
$$

AES-CBC (4/7)

In terms of decryption we have

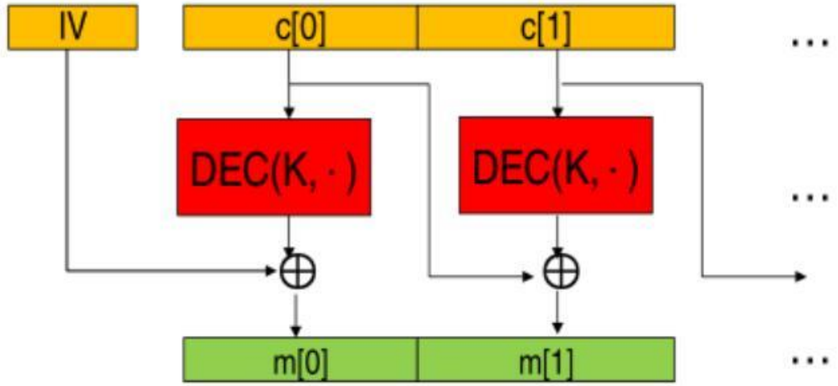

AES-CBC (5/7)

AES-CBC decryption formula

$$
\begin{aligned}
P_1 &= IV \oplus \text{AES-DEC}(k, C_1) \\
P_2 &= C_1 \oplus \text{AES-DEC}(k, C_2) \\
&\vdots \\
P_n &= C_{n-1} \oplus \text{AES-DEC}(k, C_n)
\end{aligned}
$$

AES-CBC (6/7)

When using AES in CBC mode we introduce an **Initialization Vector** (IV), which must be carefully handled.

AES-CBC (6/7)

When using AES in CBC mode we introduce an **Initialization Vector** (IV), which must be carefully handled.

NOTE: Predictable IVs could lead to a version of the BEAST attack!

AES-CBC (7/7)

Given that AES is a block cipher, it only works on blocks of 128 bits.

What happens if our plaintext does not evenly divide into 128?

AES-CBC (7/7)

Given that AES is a block cipher, it only works on blocks of 128 bits.

What happens if our plaintext does not evenly divide into 128?

Basic idea: **padding**.

PKCS #7 PADDING

PKCS #7 padding (1/3)

Described in **RFC 5652**, **PKCS #7** works as follows:

The value of each added byte is the number of bytes that are added

PKCS #7 padding (2/3)

With **block size = 8 byte = 64 bit**

$$\texttt{0x A2 CD} \longrightarrow \texttt{0x A2 CD}\overbrace{\texttt{06 06 06 06 06 06}}^{\text{6 padding bytes}}$$

$$\texttt{0x A2 CD 03 4D} \longrightarrow \texttt{0x A2 CD 03 4D}\overbrace{\texttt{04 04 04 04}}^{\text{4 padding bytes}}$$

$$\texttt{0x A2 CD 03 4D 5F FF} \longrightarrow \texttt{0x A2 CD 03 4D 5F FF}\overbrace{\texttt{02 02}}^{\text{2 padding bytes}}$$

PKCS #7 padding (3/3)

With **block size = 16 byte = 128 bit**

`0x A2 CD 03 4D 5F`

$$\downarrow$$

$$\texttt{0x A2 CD 03 4D 5F}\ \underbrace{\texttt{0B 0B 0B 0B 0B 0B 0B 0B 0B 0B 0B}}_{\text{11 padding bytes}}$$

MAC-THEN-ENCRYPT

MAC-Then-Encrypt (1/5)

As we have previously discussed, basic TLS implements a **MAC-Then-Encrypt** scheme for securing the confidentiality and integrity of a session.

MAC-Then-Encrypt (2/5)

When used with a **block cipher**, it works as follows:

1. **MAC** is computed on:
    - TCP sequence number (against **replay attacks**)
    - TLS header
    - TLS record data
2. **Padding** is added.
3. **Block encryption**.

MAC-Then-Encrypt (3/5)

The problem with this construction is that the **MAC** is computed before the padding is added. That is,

Integrity protection does not cover the padding

MAC-Then-Encrypt (4/5)

An attacker can change the **padding** of a valid TLS message and the server will not be able to recognize that such change has taken place.

MAC-Then-Encrypt (4/5)

An attacker can change the **padding** of a valid TLS message and the server will not be able to recognize that such change has taken place.

Q: Is this a security problem?

MAC-Then-Encrypt (5/5)

If the attacker is also able to obtain a **PKCS #7 oracle**, then the attacker can perform a **CBC padding oracle attack** in order to decrypt and encrypt arbitrary data using the server's key.

MAC-Then-Encrypt (5/5)

If the attacker is also able to obtain a **PKCS #7 oracle**, then the attacker can perform a **CBC padding oracle attack** in order to decrypt and encrypt arbitrary data using the server's key.

(technically, we don't steal the key, we just force the server to use it as we wish)

CRYPTOGRAPHIC ORACLES

Cryptography Oracles (1/6)

As stated by **Alan Turing** in 1938 in his PhD

Let us suppose we are supplied with some **unspecified means of solving number-theoretic problems; a kind of oracle as it were**. We shall not go any further into the nature of the oracle apart from saying it cannot be a machine.

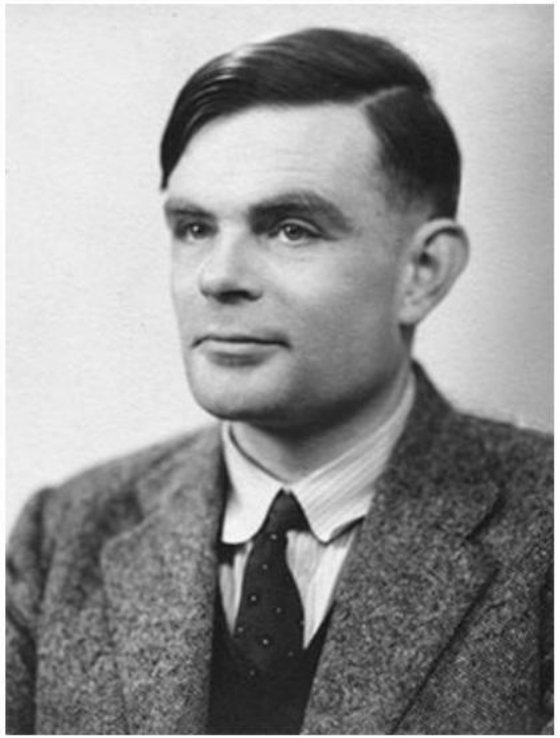

Cryptography Oracles (2/6)

We can visualize an **oracle** as a **black box** that answers specific questions.

$$\text{Question} \longrightarrow \text{Oracle} \longrightarrow \text{Answer}$$

Cryptography Oracles (2/6)

We can visualize an **oracle** as a **black box** that answers specific questions.

$$\text{Question} \longrightarrow \text{Oracle} \longrightarrow \text{Answer}$$

Different types of oracles might answer for different questions.

Cryptography Oracles (3/6)

For example,

Let $g_{(e,N)}$ be a function that takes in input a ciphertext c encrypted with the key (e, N) and outputs 0 if the relative plainext m is even, or 1 if its odd.

Where

$$c = m^e \mod N$$

Cryptography Oracles (4/6)

In our specific case, the code of the challenge offers a **PKCS#7 oracle**:

Cryptography Oracles (4/6)

In our specific case, the code of the challenge offers a **PKCS#7 oracle**:

- If the message we send, once decrypted, respects the rules of the **PKCS#7** padding, then we get an `OK!` reply.

Cryptography Oracles (4/6)

In our specific case, the code of the challenge offers a **PKCS#7 oracle**:

- If the message we send, once decrypted, respects the rules of the **PKCS#7** padding, then we get an `OK!` reply.
- Otherwise we get a `NOPE` reply.

Cryptography Oracles (4/6)

Mathematically, let C be the ciphertext of the plaintext P. Then

$$O(C) = \begin{cases} 1 & , \quad P \text{ is correctly padded according to PKCS\#7} \\ 0 & , \quad \text{otherwise} \end{cases}$$

Cryptography Oracles (5/6)

Code that implements the **PKCS#7 oracle**

```
while True:
    try:
        client_payload = req.recv(4096)
        if len(client_payload) > 0:
            oracle_output = oracle(client_payload)
            if oracle_output == True:
                req.sendall(b'OK!\n> ')
            else:
                req.sendall(b'NOPE\n> ')
    except Exception as e:
        print(e)
        exit()
```

Cryptography Oracles (6/6)

Code that implements the **PKCS#7 oracle**

```
def oracle(payload):
    try:
        payload = b64decode(payload)
        CIPHER = AES.new(KEY, AES.MODE_CBC, IV)
        decrypted_payload = CIPHER.decrypt(payload)
        unpadded_payload = unpad(decrypted_payload, AES.block_size)
        return True
    except ValueError as e:
        return False
```

We are now ready to describe the attack.

THE SOLUTION

Useful notation (1/3)

Plaintext blocks denoted with $P_1, P_2, \ldots, P_m$.

Ciphertext blocks denoted with $C_1, C_2, \ldots, C_m$.

Where m denotes the total number of blocks.

Useful notation (2/3)

$$P_i^j := j\text{-th byte of the } i\text{-th plaintext block}$$

$$C_i^j := j\text{-th byte of the } i\text{-th ciphertext block}$$

Useful notation (2/3)

Let n denote the byte length of the block cipher in use.

$$P_1 := P_1^1 \ , \ P_1^2 \ , \ \ldots \ , \ P_1^n$$

$$\downarrow$$

$$C_1 := C_1^1 \ , \ C_1^2 \ , \ \ldots \ , \ C_1^n$$

Let $C_1, C_2, C_3, \ldots$ be the various ciphertext blocks, and let IV be the **initialization vector** used to bootstrap the **AES-CBC** construction.

Remember the core **AES-CBC equations**…

AES-CBC encryption	**AES-CBC decryption**
$C_1 = \text{AES-ENC}(k, IV \oplus P_1)$	$P_1 = IV \oplus \text{AES-DEC}(k, C_1)$
$C_2 = \text{AES-ENC}(k, C_1 \oplus P_2)$	$P_2 = C_1 \oplus \text{AES-DEC}(k, C_2)$
$\vdots$	$\vdots$
$C_n = \text{AES-ENC}(k, C_{n-1} \oplus P_n)$	$P_n = C_{n-1} \oplus \text{AES-DEC}(k, C_n)$

We will now describe how an attacker is able to decrypt the second ciphertext block C_2.

That is, we want to obtain P_2

Consider only the first two blocks and the IV

$$C := \mathrm{IV} \ , \ C_1 \ , \ C_2$$

We will find the last byte of P_2 using the **oracle** exposed by the server in a process of **trial and error**.

- Is the last byte of P_2 equal to `0x00`?
- Is the last byte of P_2 equal to `0x01`?
- ...
- Is the last byte of P_2 equal to `0xFF`?

Consider then the following question

Q: Is the last byte of P_2 equal to `0x41`?

Consider then the following question

Q: Is the last byte of P_2 equal to `0x41`?

(`0x41` $=$ `A`, using **ascii encoding**)

Using our new notation we can rephrase the question as follows

$$\textbf{Q}: P_2^n = \texttt{0x41}\,?$$

Q: $P_2^n = \texttt{0x41}$?

Q: $P_2^n = \texttt{0x41}$?

The idea is to start from C_1 and construct a new $\hat{C}_1$

$$\hat{C}_1 := C_1^1 \ , \ C_1^2 \ , \ C_1^3 \ , \ \ldots \ , \ C_1^{n-1} \ , \ \underbrace{C_1^n \oplus \texttt{0x41} \oplus \texttt{0x01}}_{\text{byte changed}}$$

Q: $P_2^n = \texttt{0x41}$?

We can then use $\hat{C}_1$ to **construct a new ciphertext**

$$C = \mathrm{IV}\ ,\ C_1\ ,\ C_2 \quad \text{(original ciphertext)}$$

$$\hat{C} = \mathrm{IV}\ ,\ \hat{C}_1\ ,\ C_2 \quad \text{(original ciphertext)}$$

Q: $P_2^n = \texttt{0x41}$?

Suppose now the attacker sends this new ciphertext $\hat{C}$ to the oracle, and the oracle replies with

$$O(\hat{C}) = 1$$

That is, the associated plaintext $\hat{P}$ is correctly padded according to **PKCS#7**

Q: $P_2^n = \texttt{0x41}$?

Suppose now the attacker sends this new ciphertext $\hat{C}$ to the oracle, and the oracle replies with

$$O(\hat{C}) = 1$$

That is, the associated plaintext $\hat{P}$ is correctly padded according to **PKCS#7**

What can we infer?

Q: $P_2^n = \texttt{0x41}$?

By definition, the last byte of $\hat{P}$ is obtained by XORing together the last byte of $\hat{C}_1$, which is the byte modified by the attacker, and the last byte obtained by applying the decryption procedure to C_2.

Q: $P_2^n = \texttt{0x41}$?

In formula,

$$
\begin{aligned}
\hat{P}_2^n &= \hat{C}_1^n \oplus \text{AES-DEC}(K, C_2)^n \\
&= \left(C_1^n \oplus \texttt{0x41} \oplus \texttt{0x01}\right) \oplus \text{AES-DEC}(K, C_2)^n \\
&= \left(C_1^n \oplus \text{AES-DEC}(K, C_2)^n\right) \oplus \texttt{0x41} \oplus \texttt{0x01} \\
&= P_2^n \oplus \texttt{0x41} \oplus \texttt{0x01}
\end{aligned}
$$

Q: $P_2^n = \texttt{0x41}$?

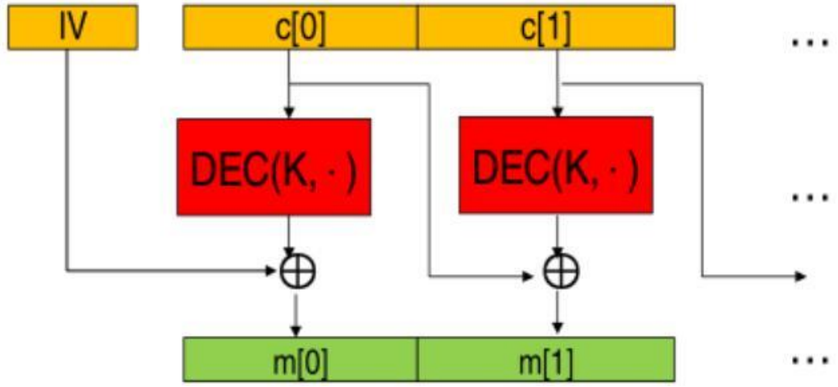

Q: $P_2^n = \texttt{0x41}$?

For $\hat{P}$ to be correctly padded we have a bunch of different scenarios:

1. $\hat{P}_2^n = \texttt{0x01} \implies \left(P_2^n = \texttt{0x41}\right)$
2. $\hat{P}_2^n = \texttt{0x02} \implies \left(P_2^n = \texttt{0x42} \wedge P_2^{n-1} = \texttt{0x02}\right)$
3. $\hat{P}_2^n = \texttt{0x03} \implies \left(P_2^n = \texttt{0x43} \wedge P_2^{n-1} = \texttt{0x03} \wedge P_2^{n-2} = \texttt{0x03}\right)$
4. ...

Q: $P_2^n = \texttt{0x41}$?

For $\hat{P}$ to be correctly padded we have a bunch of different scenarios:

1. $\hat{P}_2^n = \texttt{0x01} \implies \left(P_2^n = \texttt{0x41}\right)$
2. $\hat{P}_2^n = \texttt{0x02} \implies \left(P_2^n = \texttt{0x42} \wedge P_2^{n-1} = \texttt{0x02}\right)$
3. $\hat{P}_2^n = \texttt{0x03} \implies \left(P_2^n = \texttt{0x43} \wedge P_2^{n-1} = \texttt{0x03} \wedge P_2^{n-2} = \texttt{0x03}\right)$
4. ...

(only the first one is highly likely)

Q: $P_2^n = \texttt{0x41}$?

Therefore,

$$O(\hat{C}) = 1 \quad \Longrightarrow \quad P_2^n = \texttt{0x41} \ \text{ highly likely}$$

$$O(\hat{C}) = 0 \quad \Longrightarrow \quad P_2^n \neq \texttt{0x41}$$

Q: $P_2^n = \texttt{0x41}$?

If we have not yet discovered the value of P_2^n we can proceed with the next guess for the same byte, for example

New Q: $P_2^n = \texttt{0x42}$?

Q: $P_2^n = \texttt{0x41}$?

If we have discovered the value of P_2^n we can proceed to discover the next byte

New Q: $P_2^{n-1} = \texttt{0x41}$?

Q: $P_2^{n-1} = \texttt{0x41}$?

Q: $P_2^{n-1} = \texttt{0x41}$?

The construction is analogous to the one showed before.

From the original ciphertext C_1 we construct a new ciphertext $\hat{C}_1$.

Q: $P_2^{n-1} = \texttt{0x41}$?

The construction of $\hat{C}_1$ is done as follows

$$\hat{C}_1 := C_1^1 \ , \ C_1^2 \ , \ C_1^3 \ , \ \ldots \ , \ \underbrace{C_1^{n-1} \oplus \texttt{0x41} \oplus \texttt{0x02}}_{\text{byte changed}} \ , \ \underbrace{C_1^n \oplus P_2^n \oplus \texttt{0x02}}_{\text{byte changed}}$$

Q: $P_2^{n-1} = \texttt{0x41}$?

The construction of $\hat{C}_1$ is done as follows

$$\hat{C}_1 := C_1^1 \ , \ C_1^2 \ , \ C_1^3 \ , \ \ldots \ , \ \underbrace{C_1^{n-1} \oplus \texttt{0x41} \oplus \texttt{0x02}}_{\text{byte changed}} \ , \ \underbrace{C_1^n \oplus P_2^n \oplus \texttt{0x02}}_{\text{byte changed}}$$

Where P_2^n is the value we discovered previously

Q: $P_2^{n-1} = \texttt{0x41}$?

We then send to our oracle the following ciphertext

$$C = \mathrm{IV}\ ,\ C_1\ ,\ C_2 \quad \text{(original ciphertext)}$$
$$\hat{C} = \mathrm{IV}\ ,\ \hat{C}_1\ ,\ C_2 \quad \text{(original ciphertext)}$$

Q: $P_2^{n-1} = \texttt{0x41}$?

Suppose now the attacker sends this new ciphertext $\hat{C}$ to the oracle, and the oracle replies with

$$O(\hat{C}) = 1$$

Q: $P_2^{n-1} = \texttt{0x41}$?

Suppose now the attacker sends this new ciphertext $\hat{C}$ to the oracle, and the oracle replies with

$$O(\hat{C}) = 1$$

What can we infer?

Q: $P_2^{n-1} = \texttt{0x41}$?

By definition, it means that the relative plaintext $\hat{P}$ is correctly padded according to **PKCS#7**.

Q: $P_2^{n-1} = \texttt{0x41}$?

Now, in this case there is only one possible scenario in which $\hat{P}$ is correctly padded. And that is when

$$\hat{P}_2^{n-1} = \texttt{0x02}$$

Q: $P_2^{n-1} = \texttt{0x41}$?

By construction we have

$$
\begin{aligned}
\hat{P}_2^{n-1} &= \hat{C}_1^{n-1} \oplus \text{AES-DEC}(K, C_2)^{n-1} \\
&= \left(C_1^{n-1} \oplus \texttt{0x41} \oplus \texttt{0x02}\right) \oplus \text{AES-DEC}(K, C_2)^{n-1} \\
&= \left(C_1^{n-1} \oplus \text{AES-DEC}(K, C_2)^{n-1}\right) \oplus \texttt{0x41} \oplus \texttt{0x02} \\
&= P_2^{n-1} \oplus \texttt{0x41} \oplus \texttt{0x02}
\end{aligned}
$$

Q: $P_2^{n-1} = \texttt{0x41}$?

Thus,

$$\begin{cases} \hat{P}_2^{n-1} = P_2^{n-1} \oplus \texttt{0x41} \oplus \texttt{0x02} \\ \hat{P}_2^{n-1} = \texttt{0x02} \end{cases} \implies P_2^{n-1} = \texttt{0x41}$$

Q: $P_2^{n-1} = \texttt{0x41}$?

Therefore,

$$O(\hat{C}) = 1 \quad \Longrightarrow \quad P_2^{n-1} = \texttt{0x41}$$

$$O(\hat{C}) = 0 \quad \Longrightarrow \quad P_2^{n-1} \neq \texttt{0x41}$$

Q: $P_2^{n-1} = \texttt{0x41}?$

If we have not yet discovered the value of P_2^{n-1} we can proceed with the next guess for the same byte.

New Q: $P_2^{n-1} = \texttt{0x42}?$

Q: $P_2^{n-1} = \texttt{0x41}$?

If we have discovered the value of P_2^{n-1} we can proceed to discover the next byte

New Q: $P_2^{n-2} = \texttt{0x41}$?

Q: $P_2^{n-2} = \texttt{0x41}$?

Q: $P_2^{n-2} = \texttt{0x41}$?

$$\hat{C}_1 := C_1^1 \ , \ C_1^2 \ , \ C_1^3 \ , \ \ldots \ , \ \underbrace{C_1^{n-2} \oplus \texttt{0x41} \oplus \texttt{0x03}}_{\text{byte changed}} \ , \ \underbrace{C_1^{n-1} \oplus P_2^{n-1} \oplus \texttt{0x03}}_{\text{byte changed}} \ , \ \underbrace{C_1^{n} \oplus P_2^{n} \oplus \texttt{0x03}}_{\text{byte changed}}$$

Q: $P_2^{n-2} = \texttt{0x41}$?

$$\hat{C}_1 := C_1^1 \,,\, C_1^2 \,,\, C_1^3 \,,\, \ldots \,,\, \underbrace{C_1^{n-2} \oplus \texttt{0x41} \oplus \texttt{0x03}}_{\text{byte changed}} \,,\, \underbrace{C_1^{n-1} \oplus P_2^{n-1} \oplus \texttt{0x03}}_{\text{byte changed}} \,,\, \underbrace{C_1^{n} \oplus P_2^{n} \oplus \texttt{0x03}}_{\text{byte changed}}$$

Where P_2^{n-1} and P_2^{n} were discovered previously.

And it continues like that, until we're able to decrypt the entire block

$$C_2 \longrightarrow P_2$$

We're not able to decrypt C_1 because to do so we would need to modify the **Initialization Vector** (IV), which we do not have.

THE CODE

The previous solution can be implemented in code as follows

```
def challenge_3_solution_main():
    global HOST, PORT, SOCK, ENCRYPTED_MSG, BLOCK_SIZE
    SOCK = socket.socket(socket.AF_INET, socket.SOCK_STREAM)
    SOCK.settimeout(300)
    SOCK.connect((HOST, PORT))
    server_data = SOCK.recv(4096)
    start_delimiter = b"\n\nENCRYPTED_FLAG WITH CBC-AES: "
    end_delimiter = b"\n\n> "
    i = server_data.find(start_delimiter) + len(start_delimiter)
    j = server_data.find(end_delimiter)

    ENCRYPTED_MSG = server_data[i:j]
    encrypted_msg_bytes = b64decode(ENCRYPTED_MSG)
    num_blocks = int(len(encrypted_msg_bytes) / BLOCK_SIZE)
    plaintext = []
    # given that we don't know the IV we can only decrypt starting from the 2nd block.
    for i in range(2, num_blocks + 1):
        plaintext += decrypt_block(encrypted_msg_bytes, i, block_size=BLOCK_SIZE)
    plaintext = "".join(map(lambda x : chr(x), plaintext))
    print(f"Plaintext obtained is: {plaintext}")
    SOCK.close()
```

decrypt_block (1/3)

```python
def decrypt_block(encrypted_text, n, block_size=8):
    """ Decrypts the n-th block of the encrypted_text """
    assert n > 1, "Cannot decrypt first block as we don't know the IV"

    # are we the last block? this matter because the last block is the
    # only block that is properly padded, and therefore could cause a
    # false positive answer when guessing the last byte with the value
    # of 0x1. Since then the xor would eliminate, the ciphertext
    # woulnd't change and therefore we would simply submit the block
    # as it is.
    last_block = True if int(len(encrypted_text) / block_size) == n else False

    saved_bytes = bytes(encrypted_text[block_size * (n-2): block_size * (n-1)])
    guess_so_far = [0] * block_size
```

decrypt_block (2/3)

```
for i in range(0, block_size):
    msg = list(encrypted_text[:block_size * n])
    found = False
    for c in range(0, 256):
        if last_block and i == 0 and c == 1:
            # skip this to avoid false positives,
            continue
        padding = i + 1
        guess_so_far[block_size - 1 - i] = c
        # prepare new msg depending on how far we've come within this single block
        for j in range(0, i + 1):
            global_index = block_size * (n - 1) - j - 1
            relative_index = block_size - j - 1
            msg[global_index] = saved_bytes[relative_index] ^ guess_so_far[relative_index] ^ padding
```

decrypt_block (3/3)

```
        # test new msg
        r = query_oracle(bytes(msg))
        if r:
            found = True
            if chr(c) in string.printable:
                print(f"[{n}]: byte {block_size - i} is: {c}, {chr(c)}")
            else:
                print(f"[{n}]: byte {block_size - i} is: {c}, non-printable byte")
            break

    if not found and last_block and i == 0:
        # since we have not found any other alternatives, we can
        # safely assume that this is the correct value
        guess_so_far[block_size - 1 - i] = 1

return guess_so_far
```

Finally, the `query_oracle` is used to obtain the **oracle** from the server

```
def query_oracle(payload):
    global SOCK
    encoded_payload = b64encode(payload)
    SOCK.send(encoded_payload)
    oracle_reply = SOCK.recv(4096)
    return b"OK" in oracle_reply
```

Example Execution (1/3)

```
$ python3 solution.py
[2]: byte 16 is: 84, T
[2]: byte 15 is: 80, P
[2]: byte 14 is: 49, 1
[2]: byte 13 is: 82, R
[2]: byte 12 is: 67, C
[2]: byte 11 is: 78, N
[2]: byte 10 is: 51, 3
[2]: byte 9 is: 45, -
[2]: byte 8 is: 78, N
[2]: byte 7 is: 51, 3
[2]: byte 6 is: 72, H
[2]: byte 5 is: 84, T
[2]: byte 4 is: 45, -
[2]: byte 3 is: 67, C
[2]: byte 2 is: 52, 4
[2]: byte 1 is: 77, M
```

Example Execution (2/3)

```
[3]: byte 16 is: 3, non-printable byte
[3]: byte 15 is: 3, non-printable byte
[3]: byte 14 is: 3, non-printable byte
[3]: byte 13 is: 83, S
[3]: byte 12 is: 85, U
[3]: byte 11 is: 48, 0
[3]: byte 10 is: 82, R
[3]: byte 9  is: 51, 3
[3]: byte 8  is: 71, G
[3]: byte 7  is: 78, N
[3]: byte 6  is: 52, 4
[3]: byte 5  is: 68, D
[3]: byte 4  is: 45, -
[3]: byte 3  is: 83, S
[3]: byte 2  is: 49, 1
[3]: byte 1  is: 45, -
```

Example Execution (3/3)

```
Plaintext obtained is: M4C-TH3N-3NCR1PT-1S-D4NG3R0US
```

Padding Oracle On AES-CBC-PKCS#7

Out first CTF-like challenge :D